New Jersey Semi-Conductor Products, Inc.

20 STERN AVE.
SPRINGFIELD, NEW JERSEY 07081
U.S.A.

TELEPHONE: (973) 376-2922
(212) 227-6005
FAX: (973) 376-8960

TYNx40 Series

STANDARD

40A SCRs

MAIN FEATURES:

Symbol	Value	Unit
$I_{T(RMS)}$	40	A
V_{DRM}/V_{RRM}	600 to 1000	V
I_{GT}	35	mA

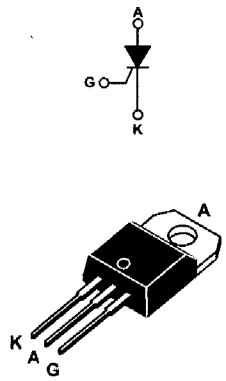

TO-220AB
(TYNx40)

DESCRIPTION

The TYNx40 series is suitable for applications where in-rush current conditions are critical, such as overvoltage crowbar protection circuits in power supplies, in-rush current limiting circuits, solid state relays (in back to back configuration), welding equipment, high power motor control circuits.
Using clip assembly technology, they provide a superior performance in high surge current capabilites.

ABSOLUTE RATINGS (limiting values)

Symbol	Parameter			Value	Unit
$I_{T(RMS)}$	RMS on-state current (180° conduction angle)		Tc = 95°C	40	A
$I_{T(AV)}$	Average on-state current (180° conduction angle)		Tc = 95°C	25	A
I_{TSM}	Non repetitive surge peak on-state current	tp = 8.3 ms	Tj = 25°C	480	A
		tp = 10 ms		460	
I^2t	I^2t Value for fusing		Tj = 25°C	1060	A^2s
dI/dt	Critical rate of rise of on-state current $I_G = 2 \times I_{GT}$, tr ≤ 100 ns	F = 60 Hz	Tj = 125°C	50	A/µs
I_{GM}	Peak gate current	tp = 20 µs	Tj = 125°C	4	A
$P_{G(AV)}$	Average gate power dissipation		Tj = 125°C	1	W
T_{stg} Tj	Storage junction temperature range Operating junction temperature range			- 40 to + 150 - 40 to + 125	°C
V_{RGM}	Maximum peak reverse gate voltage			5	V

ELECTRICAL CHARACTERISTICS (Tj = 25°C, unless otherwise specified)

Symbol	Test Conditions			Value	Unit
I_{GT}	V_D = 12 V R_L = 33 Ω		MIN.	3.5	mA
			MAX.	35	
V_{GT}			MAX.	1.3	V
V_{GD}	$V_D = V_{DRM}$ R_L = 3.3 kΩ	Tj = 125°C	MIN.	0.2	V
I_H	I_T = 500 mA Gate open		MAX.	75	mA
I_L	$I_G = 1.2\ I_{GT}$		MAX.	150	mA
dV/dt	V_D = 67 % V_{DRM} Gate open	Tj = 125°C	MIN.	1000	V/µs
V_{TM}	I_{TM} = 80 A tp = 380 µs	Tj = 25°C	MAX.	1.6	V
V_{t0}	Threshold voltage	Tj = 125°C	MAX.	0.85	V
R_d	Dynamic resistance	Tj = 125°C	MAX.	10	mΩ
I_{DRM}	$V_{DRM} = V_{RRM}$	Tj = 25°C	MAX.	5	µA
I_{RRM}		Tj = 125°C		4	mA

THERMAL RESISTANCES

Symbol	Parameter	Value	Unit
$R_{th(j-c)}$	Junction to case (DC)	0.8	°C/W
$R_{th(j-a)}$	Junction to ambient (DC)	60	°C/W

PRODUCT SELECTOR

Part Number	Voltage			Sensitivity	Package
	600 V	800 V	1000 V		
TYNx40	X	X	X	35 mA	TO-220AB

PACKAGE MECHANICAL DATA

TO-220AB (Plastic)

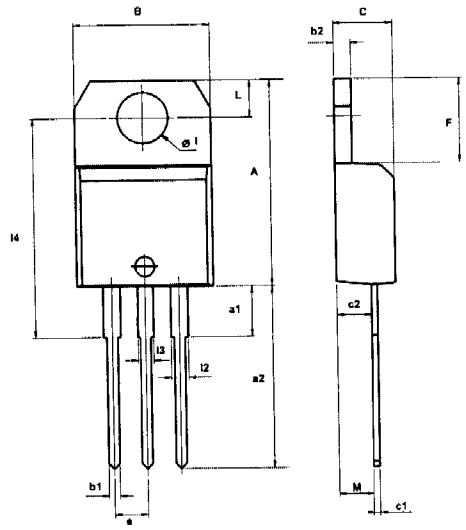

REF.	DIMENSIONS					
	Millimeters			Inches		
	Min.	Typ.	Max.	Min.	Typ.	Max.
A	15.20		15.90	0.598		0.625
a1		3.75			0.147	
a2	13.00		14.00	0.511		0.551
B	10.00		10.40	0.393		0.409
b1	0.61		0.88	0.024		0.034
b2	1.23		1.32	0.048		0.051
C	4.40		4.60	0.173		0.181
c1	0.49		0.70	0.019		0.027
c2	2.40		2.72	0.094		0.107
e	2.40		2.70	0.094		0.106
F	6.20		6.60	0.244		0.259
I	3.75		3.85	0.147		0.151
l4	15.80	16.40	16.80	0.622	0.646	0.661
L	2.65		2.95	0.104		0.116
l2	1.14		1.70	0.044		0.066
l3	1.14		1.70	0.044		0.066
M		2.60			0.102	